07/2025 S380GB251500

Due to our policy of constant technological upgrading, the technical specifications may be subject to change without prior notice.
According to the standards in force, in non-EU areas the availability and specifications of some products and/or features may vary. Please contact your local distributor for further information.



S380TRC

THE PEAK OF TECHNOLOGY

cefla
Making Your Life Better.

BU Medical Equipment
Sede Legale ed Amministrativa / Headquarters
CEFLA s.c.
Via Selice Provinciale, 23/a
40026 Imola (BO) - **Italy**
t. +39 0542 653111
f. +39 0542 653344
sternweber.com

Stabilimento / Plant
Via Bicocca, 14/C
40026 Imola (BO) - **Italy**
t. +39 0542 653441
f. +39 0542 653601

STERN WEBER

STERNWEBER.COM

STERN WEBER

TECHNOLOGICAL INTERACTION

Featuring the latest exclusive technology, the S380TRC lets dentists incorporate the interactive LED Pack and advanced software to allow voice-activated human-machine interaction. Cutting-edge connectivity and instruments streamline your work, allowing you to make the most of your skills.

EXCLUSIVE ERGONOMICS

The wellbeing of the patient, the comfort of the dental staff and cutting-edge performance are all combined in the S380TRC. Essential design, lighter main parts and exclusive ergonomic concepts blend with a unique patient chair that offers synchronized movements and lateral seat rotation.

UNRIVALLED EXPERIENCE

A work unit that meets every specific clinical need. The 7" multitouch display offers an unprecedented user experience and lets the dentist accurately control the dynamic instruments and the integrated hygiene and multimedia systems.



YOUR TALENT INSPIRES US









Patient involvement

When the powered rotation brings the chair to the access position, the surrounding area is completely free from obstacles. Everything is focussed on respect for the patient and the desire to seat him or her as comfortably as possible. In this position, communication between the dental professional and the patient is less formal and more relaxed.

Ideal accessibility

Thanks to the powered chair rotation and positioning at an ideal height for all body sizes, access to the chair is comfortable for every patient. Where the patient sensor is present, the LED light ring provides info relating to the patient's entry/exit.



A unique patient chair

Synchronized backrest and leg rest movements, and powered retractable footrest: each exclusive function incorporates the needs of operational ergonomics with the utmost comfort, offering the patient a new experience.

Seated position

Ideal for all orthodontic treatment, the seated position, adjustable to any height, allows natural occlusion between the two arches and, with the chair free from all obstruction, allows the dentist to perform extractions with greater ease.



Maximum Versatility

Chair rotation can be completed by the function that lets the Continental module be positioned on the assistant's side. The work flow is thus facilitated by the versatility of movement.

Working comfort

In the International version, the dynamic instruments can be positioned in all operating zones, ensuring maximum ergonomic practicality for each type of operation.



OPTIMAL ERGONOMIC SOLUTIONS





Voice controls

To make interaction between staff and instruments even more agile, the virtual voice assistance system offers numerous workflow improvement opportunities. For example, assistants/dentists can manage the operating light via voice control. These let users switch on, switch off or select "composite" mode. Speeds up tasks and enhances hygiene as there is no physical contact with the light.
This lets them save the images that have just been captured by a camera or X-ray sensor.

Before managing a device with voice control, the system must be activated via the foot control on the base of the dental unit.





Interactive LED Pack

As-standard application that makes dental unit design more appealing and provides user-friendly info on the status of the various integrated functions via LEDs. There are several warnings/ indicators: their colour provides dentists with a range of useful information, from scaler mode to hygiene cycle progress on the dental unit. During root canal treatment with the apex locator on, the LED ring changes colour, passing from green to yellow to red according to the distance from the apex (this mirrors the on-panel bar colours).

After starting the stopwatch, the LED ring is gradually turned off, flashing briefly when the timer expires.



THE EVOLUTION OF CONTROL



The new 7” control panel with multitouch display is at the forefront of technological development in the dental industry

The interface provides users with a clear, comprehensive array of information and plenty of scope for customization. New graphics improve the user experience and streamline interaction thanks to simple smartphone-like controls. Designed for clinical environments, it is resistant to impact and water and can be positioned to suit your needs.

The control panel allows dental unit functions to be upgraded with ease as necessary. The control panel can also be used to customise the LED ring colour and the related activation areas.

Multitouch display

The large 7” touch screen ensures excellent visibility from any angle, offers HD resolution and displays images and videos.

Di.V.A. Digital Virtual Assistant

To keep pace with technological developments, the Stern Weber product range features Internet connectivity. This latest innovation provides access to optional digital services that improve dental surgery efficiency.

Di.V.A. (Digital Virtual Assistant)
With Di.V.A., a user-friendly dashboard lets dentists or surgery owners monitor dental unit use, instrumentation and the disinfection cycles performed. Data can be obtained quickly and easily as it’s managed on a web portal, accessible from any browser.
Where a patient sensor is present, users can accurately quantify effective use of the patient chair. What’s more, Di.V.A. gives direct access to video tutorials and the user manual for the model in question.



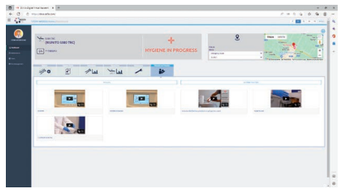

easycheck

When linked to the web via EasyCheck, the dental unit can rely on real-time remote diagnosis and technical support: this valuable tool helps technicians speed up assistance and manage it more effectively.

Wearable technologies and voice-activated controls

Instant NFC connectivity to access custom settings. Just bring the silicone bracelet (which can be sanitised) close to the dentist’s module to activate the previously saved work settings (i.e. parameters for instruments, patient chair, operating light, plus interface preferences).

Voice control is also an option: this function recognises voice commands for the micromotor, scaler, operating light, patient chair positions, timers and user profile changeovers. Makes it easier to perform tasks when no assistant is available.



USB connection
Dentists can use the USB port to upload/ download diagnostic images when the integrated multimedia system is present.



Multi-profile management
According to clinical needs, the dentist working on the S380TRC can customize all operating parameters and save them directly on the control panel or on a USB drive. Alternatively, users can opt for NFC connectivity.



NFC connectivity
This uses a chip integrated in the dentist’s module and an IP68-class bracelet. There are up to 20 memory slots, each containing a full set of work settings. An efficient, innovative solution for multi-operator clinics.

New instruments for perfect conservative work

In addition to a broad selection of turbines, contra-angles and ultrasonic scalers, the new brushless micromotors feature innovative technology known as FIT (Fluorescence-aided Identification Technique). This highlights the presence of composite materials thanks to the fluorescence emitted by a special LED integrated in the instrument. Moreover, thanks to its broad emission spectrum, the new curing light is optimized for latest-generation composite materials.



SC Scalers
Ultrasound scalers suitable for supragingival prophylaxis and periodontal tasks. Also suitable for the preparation of small cavities and usable in endodontic root canal cleaning techniques.
The LED ring indicates the current scaler mode:
PARO – green; ENDO – orange; NORMAL – blue.



i-XS4 FLUO micromotor
Even lighter and quieter, this micromotor is now available with FIT technology to detect composite materials. Allows faster, more precise removal of old composite in teeth that need to be retreated. With orthodontic or aesthetic treatments, bracket removal is simple, safe and effective.



Turbines and contra-angles
Six silent yet powerful models of highly advanced turbine, plus a broad range of ergonomic contra-angles that meet all clinical needs, from conservative dentistry to implant surgery and endodontics. With the instrument (turbine, micromotor) extracted, the LED ring shows the activated spray mode.

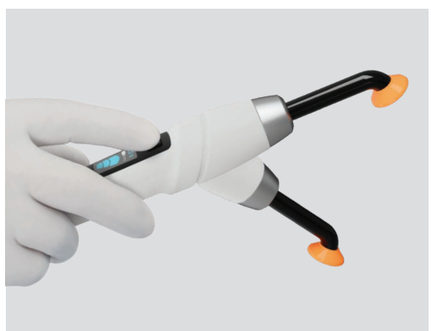

T-LED
T-LED has an emission spectrum for activation of the latest-generation composites. It features a swivel grip and a user-friendly interface. The bracket programme - one of the seven available - consists of 5 brief rapid-succession emissions.





Greater efficiency and effectiveness

All the elements used for endodontic treatment - including the brushless micromotor, apex locator, databases for the most commonplace commercially available endocanalar files and the ENDO control mode - are integrated into the S380TRC electronics and control software. During endodontic treatment, the display provides key data on a dedicated user-friendly display, making workflows faster and more efficient.

Brushless micromotor
The i-XS4 micromotor has the necessary technology for excellent performance in all types of treatment. Performance in conservative dentistry, prosthetics, endodontics (also with reciprocating movement) and implants is always ensured at the highest levels of quality. During root canal treatment the LED ring lights up synchronously with the integrated apex locator, reproducing the colours of the control panel bar.



ENDO database
A large pre-loaded library of endodontic files is available to dentists. In endodontics mode, selecting the file in the database causes the software to automatically set torque/speed; alternatively, these values can be set by the dentist as desired. The endodontic file brand names are not owned by Cefla or any of its subsidiaries.

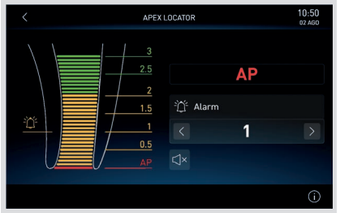

Apex locator
With the EVO E4 dedicated contra-angle, the apex locator allows the apex distance to be displayed during the root canal instrumentation phase. Nearing of the apex is also indicated by warning buzzers. It's possible to set automatic interruption of micromotor rotation when the apex is reached.



Reciprocating mode
The reciprocating mode, with alternating rotation movement, combined with the EVO E4 contra-angle, allows the use of specific files.



Perfect integration for implantology

We've created a made-to-measure solution for implantologists. In IMPLANT mode, the Full Touch control panel becomes a dedicated interface for surgical tasks. Implantologists are provided with everything needed to perform treatment, significantly speeding up workflows. Moreover, they can use the brushless micromotor, foot control and peristaltic pump incorporated in the dental unit without the workspace becoming obstructed by stand-alone devices.

EVO R20L contra-angle
The EVO R20L contra-angle, which has a 20:1 gear ratio specifically for surgery, can be autoclaved and heat-disinfected. It features an internal cooling system and external spray, plus LED lighting.

Torque curves
An optional torque curve recording function is available during treatment. In addition to monitoring the torque delivered by the micromotor, information on the entire curve constitutes a useful clinical tool for subsequent treatment on adjacent or contralateral teeth. The implant tightening torque completes the available data. It's also possible (where an integrated camera is available) to view the curve on the monitor integrated with the unit; this is useful during academic and training tasks.





Peristaltic pump
The peristaltic pump, controlled via the Full Touch control panel, is integrated into the dentist's module, eliminating the need for any additional modules or carts around the patient chair.



i-XS4 micromotor
The brushless micromotor is integrated with the dental unit electronics, which also controls the peristaltic pump. The software allows safe and precise control of speed and torque, which can reach 70 Ncm with the EVO R20L contra-angle.



A latest-generation light for every clinical need

The Venus LED MCT lamp rotates on three axes to ensure perfect lighting of the operating field whatever the task or position.
Featuring exceptional brightness, it can be set to specific values to match clinical needs.
The No Touch sensor can switch the lamp on/off and adjust light intensity up to 50,000 Lux. The hermetically sealed front screen is easy to clean, and the handles can be removed and sterilised in an autoclave.
The Venus LED MCT View combines a 4K camera with PC software to capture ultra-high-definition images and videos. The Full Touch control panel and multimedia system let users operate the various functions (recording, zoom, image capture and Smart Focus) via user-friendly icons or optional voice-activated controls. The Smart Focus system features liquid lenses, ensuring fast, optimal digital focusing. In addition to smoothing practitioner-patient communication, the camera is also, thanks to recordings and multimedia streaming, a useful aid for clinical training, treatment documentation and academic disclosure.

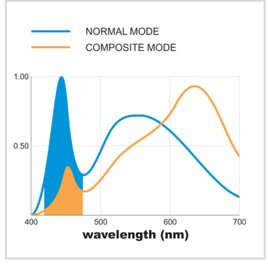



Composite mode
Working in "composite" mode ensures good visibility within the operating area without affecting composite curing. The 430-480 nm wavelength range is filtered, slowing down the activity of the camphorquinone to provide more time for modelling the materials.





Targeted lighting, advanced versatility
The Venus LED MCT has a specific colour temperature setting for every need. There are three different settings, optimised for different circumstances: a 4300K warm light for surgical treatment, a 5000K neutral light for conservative dentistry and a 5500K cool light for realistic colour capture.



Slim, flexible and redefined to make the ergonomic benefits all-encompassing

Before redesigning all the elements of the arm system and Continental module, each aspect of the dentist's work was carefully examined. Now lighter, with a more compact geometry, the dentist's module can reach any position with minimal effort. The pneumatic brake - activated and deactivated via the on-handle sensor - allows easy height adjustment. Instrument lever height has been reduced to minimise interference with the light in the work zone. The module reaches the transthoracic position, thanks to the rotation of the arm system.

Arm compactness
The arm system has been designed to minimise the overall bulk of the S380TRC and make module positioning easier. Made of cast aluminium, it is stable and lightweight, boosts operational flexibility under all circumstances and allows work in the transthoracic position.



SideFlex instrument levers
Removable and equipped with swing joints that also allow lateral movement, the levers alleviate wrist fatigue and are self-balancing. They follow the dentist's movements, are extremely light and allow for adjustment to balance and effective traction during the return.

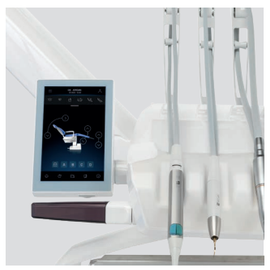

Left Side Pack
An option on the S380TRC Continental, the Left Side Pack configuration allows the placement of the console on the left side of the instrument module, with an additional handle for better manoeuvrability.



Sixth instrument
An intraoral camera or curing light can be added as the sixth instrument.



Pneumatic release
The pneumatic brake, which can be disabled by touching a sensor in the module handle, allows fast and precise positioning of the instruments.



Compact and perfected for those who need maximum working flexibility

Featuring a modern design that combines a large, easy-to-read display with an ergonomic, easy pick-up instrument layout, the International module provides lightness and easy handling. Thanks to carefully designed holders, all instruments benefit from secure support/containment and are arranged so they can be gripped with ease. The new arm system allows dentists to position the module according to their specific needs. The practical handle can be removed to facilitate cleaning.



Sixth instrument
The International module also enables the dentist to choose between a camera and a curing light.

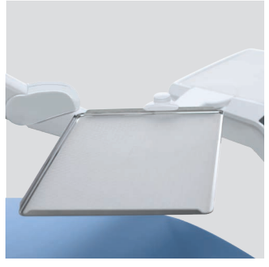

Tray holder
Easy to position, the tray holder module can be adjusted horizontally to suit a full range of treatment requirements.



Motor-driven cuspidor bowl
The cuspidor bowl rotates when the rinse or home position is selected. The automatism speeds up the workflow and prevents any interference between cuspidor bowl and patient chair.



Integrated sensor
Incorporated in the stylish cup and bowl fill unit, the optical sensor automates cup filling.

Wellbeing for the patient, a streamlined workflow for the dental team

With only minimal floor space requirements, the shape of the chair accommodates the patient perfectly while ensuring dentist and staff have excellent accessibility to the operating zone. Key features include hard-wearing upholstery, a 190 kg lifting capacity and soft-start/soft-stop vertical movement. Gentle, vibration-free movement relaxes the patient and helps dispel any anxiety about treatment. Access is simple and comfortable, thanks to the motor-driven rotation movement.
An optional sensor located between backrest and seat detects the presence of the patient for the purpose of statistics, processed by the Di.V.A. virtual assistant.

Additionally, the sensor contributes to sustainability by automatically setting the device to stand-by a set time after the patient leaves and by activating the automatic operating light switch-on/switch-off mechanism.



Memory Foam
Exceptional comfort and proper anatomical support thanks to special upholstery options.



S380TRC Hybrid
The Hybrid model increases the ergonomic versatility of integrated treatment centres. The dentist's module arm can be positioned anywhere in the treatment zone and the assistant's module can be shifted from right to left thanks to the articulated arm. The height-adjustable arm also features the Suction Stop function: this can be activated, with the cannula extracted, by pressing the foot control on the fulcrum.



Assistant's module
Module with touch screen featuring an extensive vertical excursion. The double articulated arm allows suitable positioning for every clinical situation. Available with 3 or 5 holders in the optional enlarged version, it provides the dentist with a camera, a curing light and a syringe connected to the two tubes.







A PERSONAL STYLE

Unlimited individual ergonomic choices

Stern Weber offers a wide range of customised ergonomic solutions designed to make the most of your talents in every situation: from multi-function foot controls to the sturdy cast aluminium backrest and Atlaxis headrest with pneumatic-release orbital movement. In addition to the cable version, a wireless foot control is also available to reduce the presence of floor-level cables. The batteries have an exceptionally long life. The supplied cable can be used to charge the foot control or to connect it to the dental unit.



Standard backrest
Shaped so that dental staff can move closer to the patient during treatment. Suitable for adults, children and all types of treatment.



Nordic backrest
Ensures lasting comfort during longer treatment sessions and is shaped to aid dentists working in 'indirect vision' mode.



Atlaxis
The headrest that faithfully follows the patient's anatomy. Ultra-simple fingertip release of the pneumatic lock allows orbital movement to achieve perfect positioning, vertical adjustment included.



Multi-function foot control
Cutting-edge device with ergonomic lateral-slide control that lets dentists activate Chip Air and Chip Water functions on the instrument in use, invert micromotor rotation (when extracted), control patient chair movement and recall saved positions. Also available in a wireless version.



Pressure-operated foot control
Offering the same performance as the multi-function foot control, this unit offers different ergonomics for those who prefer a pressure-operated approach. Both devices have peristaltic pump on/off controls in surgery mode. Also available in a wireless version.



Power Pedal
This third foot control model offers different design and ergonomics. It provides the same functions as the more classic models. Also available in a wireless version.



The efficiency and effectiveness of an X-ray diagnosis system in a single treatment area

The integration of a complete system increases diagnostic potential while shortening treatment times. The system features advanced technology, including the X-ray unit with digital wireless handheld controller, an LED monitor with optional touch-screen function and a latest-generation digital sensor. The X-ray image can be shown in mere seconds on both the 22" monitor and the 7" display on the Full Touch control panel.



Zen-X X-ray sensor
Extractable sensor with USB lead located on the dentist's module, can capture high-resolution images with minimal radiation dosage. Able to be sanitised, the sensor comes in two different sizes and is IP67 certified against water and dust infiltration.







RXDC - HyperSphere technology
Incorporated on the dental unit, the X-ray unit and handheld control unit require no additional installation points. Thanks to a combination of 30 cm collimation and a 0.4 mm focal spot, parallelism is excellent and images are pin sharp. Locked and unlocked by touch-sensitive pads, the tube head rotates freely around the spherical joint.



HD COMMUNICATION

Sharing information makes patients feel reassured and more cooperative

Coupled with a latest-generation HD camera, the Full HD 16: 9 medical flat-screen, tilt-adjustable monitor, resolution 1920 x 1080 pixels, with IPS control panel can be connected via cable to a PC. The LED light sources ensure high levels of contrast and brightness, while the IPS panel, which significantly broadens the screen viewing range, allows images to be comfortably viewed from any angle. The camera aids dentist-patient communication and, thanks to the slender handpiece design, it can reach distal zones with ease. Excellent depth of field eliminates any need for manual focusing.



C-U2 HD camera
Streams HD images directly to the Full Touch control panel and the integrated monitor. Speeds up diagnostics and generates material for documenting the treatment and completing clinical reports.



Full Touch Multimedia
The Full Touch Multimedia panel lets users display X-rays, images and videos. Touchscreen functionality lets dentists scroll through files and enlarge images via the 7" display



Venus LED MCT View
The Venus LED MCT View with integrated 4K camera is a powerful tool for sharing clinical information with patients to aid their understanding of treatment.



22" LED Monitor
The Full HD monitor is also available in a multitouch version that allows the screen to be positioned as desired.

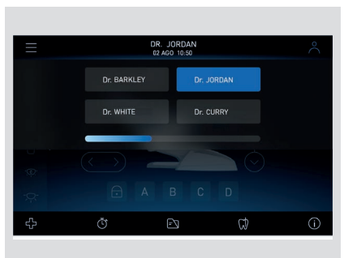

Saving
With just a few clicks, you can save the images to the local memory on the control panel, to an external PC when connected via a network cable, or download them to a USB drive.



CERTIFIED SAFETY

Scientifically certified hygiene systems

With the freedom to configure their dental units with a broad range of active devices, dentists can control every aspect with ease via the Full Touch control panel. The user-friendly interface helps users manage the maintenance and daily disinfection of the water circuits. Although the W.H.E. - a continuous sanitisation system compliant with European standards and DVGW certified - is automatic, the settings for all the other devices can be customized. The BIOSTER system carries out automatic end-of-session spray water circuit disinfection cycles. Tests performed by the **Sapienza University of Rome** and the Department of Public Health and Paediatrics of the **University of Turin** have shown that combining execution of a daily **BIOSTER** intensive disinfection cycle with use of the **W.H.E.** system results in the complete absence of bacterial load in the cooling liquids delivered by the instruments.

Unit body design provides for insertion of instruments in integrated holders. This reduces the time needed to start the selected cycle and eliminates the need for other accessories. Furthermore, the disinfectant tank can easily be top-loaded without having to open the hatch or access the dental unit interior.



A.C.V.S.
Automatic system that carries out suction system sanitisation cycles between one patient and another. Practical and fast.



I.W.F.C.
Activated via the control panel, the device ensures tubing is automatically rinsed after the machine has remained idle for some time. Included in the BIOSTER system or available separately.



W.H.E.
Continuous **Peroxy Ag+** (H_2O_2) based disinfection system and air gap separation device between mains water and dental unit circuits. Acts against all water-borne contaminants, including Legionella.



SANASPRAY
Tank with distilled water as an alternative to mains water.



Removable instrument levers
Equipped with a swing joint that also allows lateral movements, the levers are removable to permit thorough cleaning of every single element. The new dentist's module handle can also be easily removed.



LED indicators
Hygiene cycle stages (start, contact pause and end of cycle) are immediately highlighted by LED colour changes.

Flexible dental practice layouts

Thanks to the multi-connection concept, it's possible to maintain the previous dental practice layout even when an existing dental unit is being replaced.
When installing the new unit, the already-present floor-mounted connections will be suitable as the Stern Weber model allows for their connection without any need for construction work. Utilities are always covered stylishly and efficiently, thus minimising any structural intervention in the practice.

Available configurations

To optimize the layout of the practice and streamline installation, you can select one of the illustrated configurations.

P – connections are located under the rear of the unit body
K – connections are located under the front of the unit body
S / S short – the connections are located under the patient chair leg rest

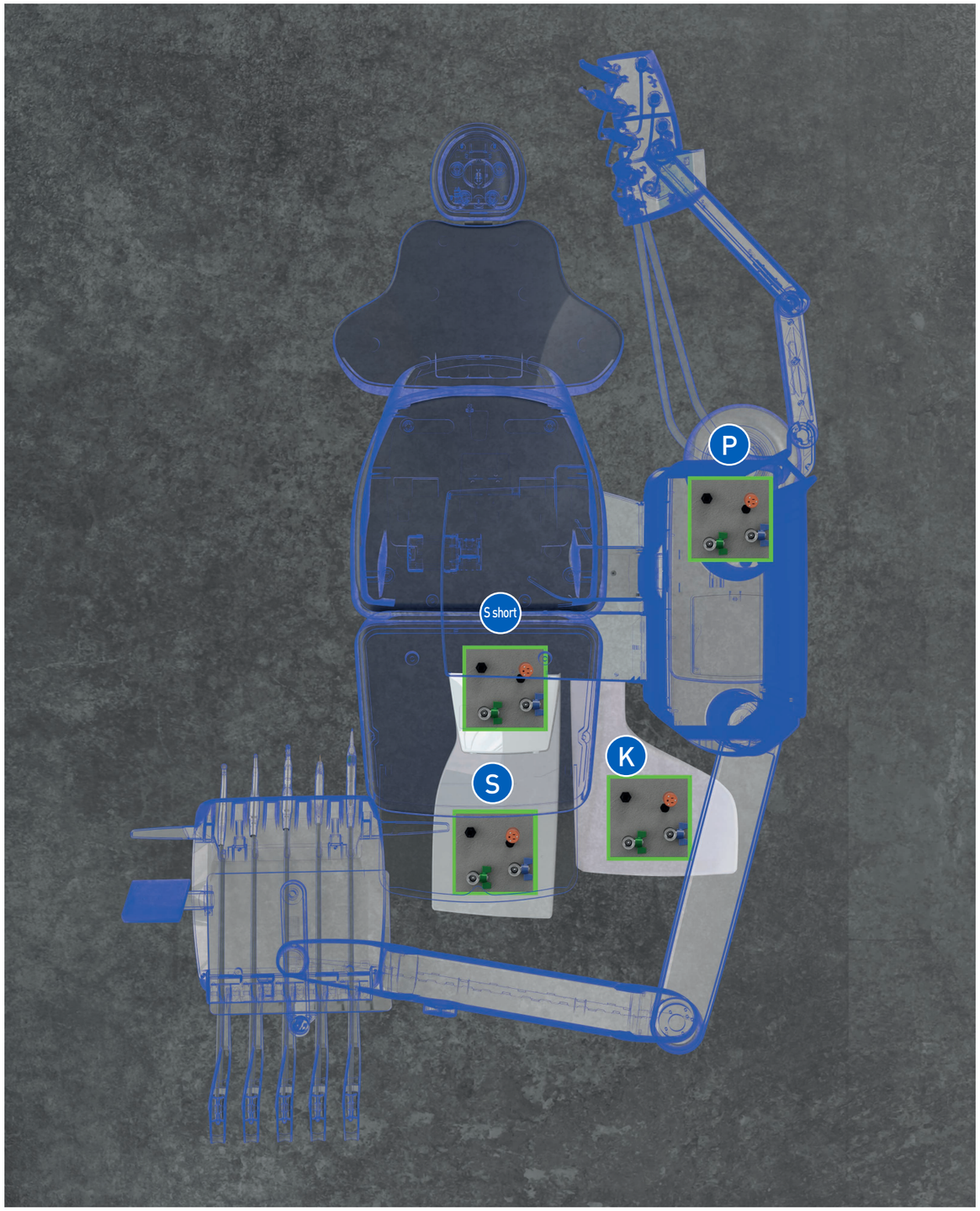

S380TRC	CONTINENTAL	INTERNATIONAL
HYGIENE SYSTEMS		
BIOSTER	*	*
A.C.V.S.	*	*
SANASPRAY	*	*
W.H.E.	*	*
I.W.F.C.	*	*
DENTIST'S MODULE		
LEFT SIDE PACK	*	–
Multimedia 7" Full Touch display	●	●
i-XS4 Micromotor with fibre optics (100 – 40,000 rpm, 5.3 Ncm)	●	●
Micromotor i-XS4 FLUO, with fibre optics and FIT technology	*	*
6-way syringe	●	●
Sixth instrument	*	*
Integrated X-ray sensor	*	*
Reciprocating mode module	*	*
Integrated Apex Locator	*	*
Peristaltic pump kit	*	*
"Torque Curve" implant function	*	*
NFC System	●	●
Voice controls	*	*
UNIT BODY		
Interactive LED Pack	●	●
Glass cuspidor bowl	●	●
Ceramic cuspidor bowl	*	*
Cuspidor bowl drive system	●	●
Cup fill sensor	●	●
Water-to-cup heater	●	●
Spray heating	*	*
Independent cannulae selection	●	●
Suction stop device on chair base	●	●
Multimedia application wiring	●	●
Assistant's tray holder	*	*
Assistant's module with 3 holders	●	●
Assistant's module with 5 holders	*	*
Venus LED MCT lamp	●	●
Venus LED MCT View lamp	*	*
PATIENT CHAIR		
Atlaxis headrest	●	●
Adjustable right armrest	●	●
Adjustable left armrest	●	●
Patient presence sensor	●	●
Multi-function foot control	●	●
Pressure-operated foot control	*	*
Power Pedal foot control	*	*
Wireless multi-function foot control	*	*
Wireless pressure-operated foot control	*	*
Wireless Power Pedal foot control	*	*

● as standard * optional – not available

CE
0051

TECHNICAL SPECIFICATIONS

CONTINENTAL

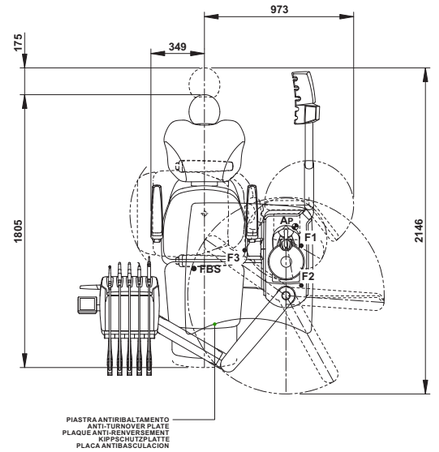

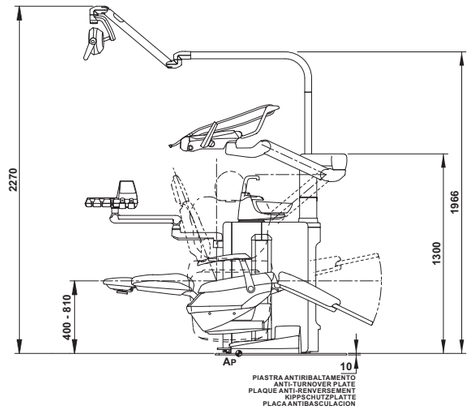

INTERNATIONAL

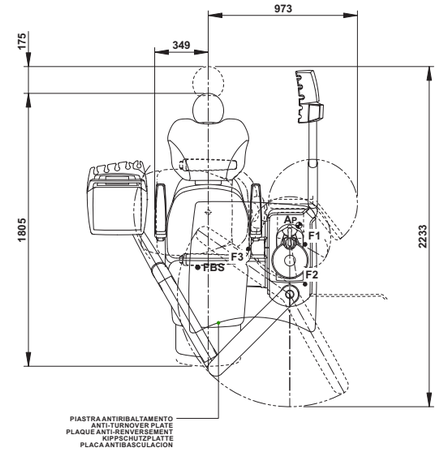

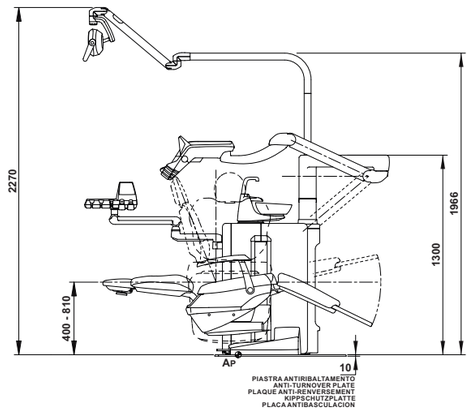

The measurements shown in the drawings are in mm.



STANDARD

102 Atlantic Blue
106 Mediterranean Blue
113 Pacific Blue
136 Indian Blue
132 Blueberry Violet
134 Japanese Wisteria
135 Venetian Red
115 Scottish Salmon
103 Nevada Yellow
123 Polynesian Green
101 Caribbean Green
137 Bright Silver
121 Anthracite Grey
130 Graphite Black
142 Anatolian Hazelnut
141 Papyrus Beige
143 Arabian Gold
140 Brazilian Brown
144 Ruby Red

MEMORY FOAM

198 Atlantic Blue
196 Mediterranean Blue
183 Pacific Blue
186 Indian Blue
192 Blueberry Violet
184 Japanese Wisteria
194 Venetian Red
195 Scottish Salmon
182 Nevada Yellow
193 Polynesian Green
197 Caribbean Green
187 Bright Silver
199 Anthracite Grey
180 Graphite Black
172 Anatolian Hazelnut
171 Papyrus Beige
173 Arabian Gold
170 Brazilian Brown
174 Ruby Red